MIC-7900

Compact Fanless System with Intel® Xeon® SoC Processor

Features

- Intel® Xeon® D-1539/D-1559 SoC processor
- Wide operating temperature (-20 ~ 50 °C)
- 9 ~ 36 V_{DC} input power range
- 2 x RS-232/422/485 and 2 x RS232 serial ports (with expansion cable)
- 1 x 2.5" HDD/SSD, 1 x CFast, 1 x M.2
- 4 x GigaLAN and 4 x USB 3.0
- Supports Advantech i-Modules, SUSIAccess, and embedded software APIs
- Supports Windows Server 2016, Linux OS, and VMware

R33138

Specifications

System Chipset	CPU	D-1539	D-1559	
	Maximum Speed	1.6GHz	1.5GHz	
	Max Turbo Frequency	2.2GHZ	2.1GHz	
	L3 Cache	12M	18M	
	Core Number	8	12	
	BIOS	AMI® SPI 64 Mb		
Memory	Technology	Dual-channel DDR4 2133/2400 MHz (supports ECC)		
	Socket	2 x 260-pin SODIMM (up to 16 GB per socket)		
	Maximum Capacity	32 GB		
Display	Chipset	ASPEED 1400 with 256MB VGA memory provides basic 2D VGA functoin		
	VGA	1 x DP15, up to 1920 x 1200 maximum resolution		
Ethernet	Controller	LAN1: Intel® i210IT (supports wake-on-LAN) LAN2: Intel® i210IT (supports wake-on-LAN) LAN3: Intel® i210IT LAN4: Intel® i210IT		
	Interface	4 x RJ45		
Storage	HDD	1 x 2.5" HDD/SSD (with MIC-75S20 i-Module, total storage room up to 5 x 2.5" HDD/SSD)		
	CFast	1		
	M.2	1 (Support PCIe signals; support M.2 22110; support M.2 2280 via optional bracket)		
I/O	USB	4 x USB 3.0 and 1 x internal USB 2.0		
	Serial Port	2 x DB9, RS232/422/485 with automatic flow control and 2 x RS-232 (with optional cable expansion)		
	Audio	2 (1 x line out and 1 x mic in)		
Security	TPM	Supports TPM 2.0 (Infineon SLB9665XQ2.0)		
Expansion	Module	Supports Advantech i-Modules		
	Mini PCIe	1 x mini PCIe (does not support m-SATA)		
LED and Switch	LED	2 x TX, 2 x RX, and 1 x Storage		
	Button	1 x Power on/off switch		
Power	Type	ATX/AT		
	Input Voltage	9 ~ 36 V_{DC}		
	Power consumption	Typical: 21.469W Maximum: 44.952W		
Watchdog Timer	Output	System reset		
	Interval	Programmable 1 ~ 255 sec/min		
Environment	Temperature	Operating (with industrial SSD)	Operating (with HDD)	Non-operating
		-20 ~ 50 °C with 0.7 m/s air flow	0 ~ 40 °C	-40 ~ 85 °C
	Humidity	95% @ 40 °C (non-condensing)		
	Vibration	With SSD: 3 Grms @ 5 ~ 500 Hz, random, 1 hr/axis With MIC-75S20/5xSSD: 1 Grms @ 5 ~ 500Hz, random, 1 hr/axis With 2.5" HDD: 1 Grms @ 5 ~ 500 Hz, random, 1 hr/axis		
	Shock	With SSD: 50G, IEC 60068-2-27, half-sine wave, 11 ms duration		
Mechanical	Dimensions (W x H x D)	73 x 192 x 230 mm (2.91" x 7.55" x 9.05")		
	Weight	2.9 kg (6.39 lbs)		
	Installation	Desktop/wall mount		
Certifications	EMC	CE/FCC Class B, CCC, BSMI		
	Safety	UL, CCC, BSMI		

All product specifications are subject to change without notice.

Last updated: 21-Jan-2019

Dimensions

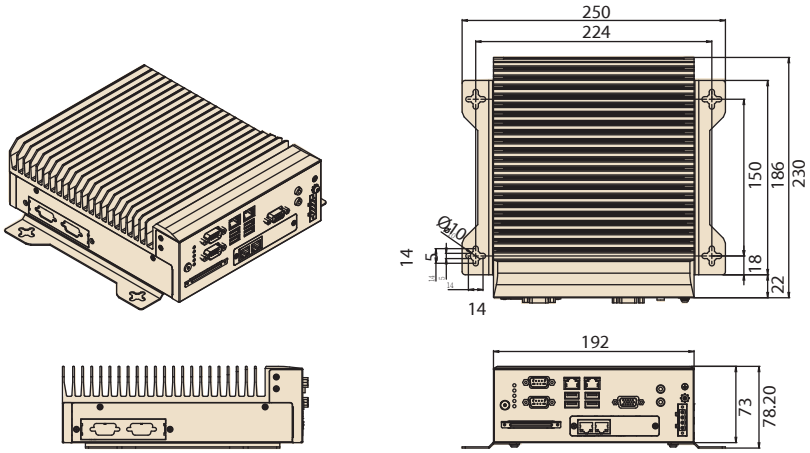

Front View

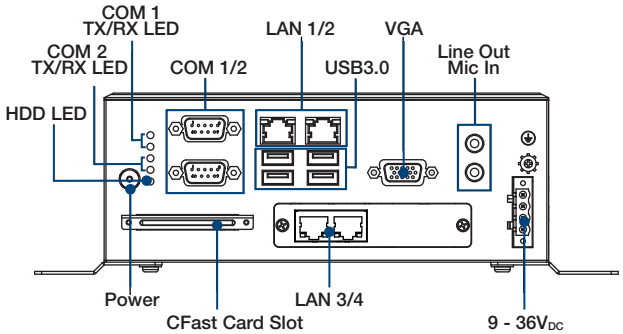

Side View

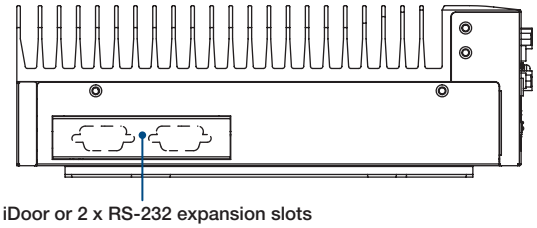

Ordering Information

Part Number	CPU	VGA	2.5" HDD/SSD	CFast	M.2	USB 3.0	GbE	COM	PCIe
MIC-7900-S5A1E	D-1559	1	1	1	1	4	4	4, up to 6 via cable	i-Module (optional)
MIC-7900-S6A1E	D-1539	1	1	1	1	4	4	4, up to 6 via cable	i-Module (optional)

Packing List

Part Number	Description	Quantity
MIC-7900	Fanless system with Intel® Xeon® SoC processor	1
1652003234	4-pin Phoenix power connector	1
1700013095	SATA cable	1
1700024372-01	SATA power cable	1
1701200220	Dual DB9 port cable (for COM5/COM6 expansion)	1
1960070543T001	Mounting bracket	2
2061790000	CD-ROM	1
2001790000	MIC-7900 startup manual (ENG+CN)	1
2001790010	MIC-7900 startup manual (TC)	1
1990019498N000	RAM thermal pad	2

Optional i-Modules*

Part Number	Description
MIC-75M40	4-slot expansion module (4 x PCIe slots)
MIC-75M13	4-slot expansion module (1 x PCIe and 3 x PCI slots)
MIC-75M20	2-slot expansion module (2 x PCIe slots)
MIC-75M20-01	2-slot expansion module (2xPCIe slots)
MIC-75M11	2-slot expansion module (1 x PCIe and 1 x PCI slots)
MIC-75M10	1-slot expansion module (1xPCIE16)
MIC-75S20	2-slot expansion and storage module (2 x PCIe and 2 removable 2.5" storage bay
MIC-75G20	GPU card expansion i-Module (2 x PCIe, 2 x removable 2.5" storage bay)

*Additional i-module details provided on the following page.

Optional Accessories

Part Number	Description
96PSA-A220W24P4-1*	Adaptor A/D, 100-240V, 220W, 24V
96PSA-A150W19P4-1**	Adaptor A/D, 100-240V, 150W, 19V
1702002600	Power cord (USA) UL/CSA, 3-pin, 10A, 125V, 1.83 M, 180 D
1700022940-01	Power cord PSE, 3-pin, 7A, 125V, 3 m, DAC-ST01
1702002605	Power cord (EU) 2-pin, 10/16A, 220V, 1.83 M, 90 D
1700018704	Power Cord UK BSI 2P 10A 250V 180cm 18AWG
AIIS-DIO32-00A1E	DIO module, 32-CH, 9-pin USB interface
98R1750020E	MIC-7000 series DIN rail accessory

Note:
* Suggest to use for MIC-7900 with i-Module added.
** Suggest to use for MIC-7900 without i-Module added.
1. MIC-7900 supports Advantech iDoor modules (both MOS and PCM series). Visit the Advantech website for more information.
2. The PCM series module requires a bracket (P/N: 1960065854N001) that must be ordered separately.

Embedded OS

Part Number	Description
2070014719	WES7P MIC-7900 x64 V5.8.0 10MUI image

i-Module Series

Expansion Module for MIC-7000 Series

Features

- Flexible expansion via PCIe/PCI slot
- MIC-7000 series compatible
- Optional smart fan for thermal optimization
- Provide additional 12Vdc power source for add-on card
- Maximum 85W for add-on card power consumption
- 2.5" storage bays for HDD/SSD expansion
- Hot Swappable HDD/SSD supported

Introduction

The i-Module series provide flexible expansion function for MIC-7000 series systems. MIC-7000 system accompanied with i-Module technology can fulfill diverse demands of customers.

Compatible Table

Model	MIC-7500 / MIC-7700 / MIC-7900			MIC-7300	
1-Slot	MIC-75M10			-	
2-Slot	MIC-75M20	MIC-75M20-01*	MIC-75M11	MIC-73M20	MIC-73M11
4-Slot	MIC-75M40*	MIC-75M13	MIC-75S20	MIC-73M13	

*MIC-7700H doesn't support MIC-75M20-01 and MIC-75M40

Selection Table

i-Module slot number starts from the inner side, as the image on the right.

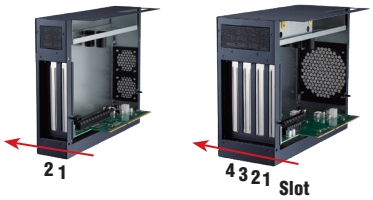

i-Module	MIC-75M10	MIC-75M11	MIC-75M20	MIC-75M20-01	MIC-75M40	MIC-75M13	MIC-75S20	MIC-73M20	MIC-73M11	MIC-73M13
Slot 1	PCIe x16	PCIe x16	PCIe x4	PCIe x8	PCIe x4	PCIe x16	PCIe x16	PCIe x1	PCIe x1	PCIe x1
Slot 2	-	PCI	PCIe x16	PCIe x8	PCIe x8	PCI	PCIe x4	PCIe x1	PCI	PCI
Slot 3	-	-	-	-	PCIe x4	PCI	-	-	-	PCI
Slot 4	-	-	-	-	PCIe x4	PCI	-	-	-	PCI
SATA Conn	-	1								
SATA PWR	-	1								
2.5" Storage Bay	-	1*			2		2x Hot Swap + 2x Internal**	1*		2
N.W. (kg)	0.64	0.87			1.16		1.60	0.87		1.16
G.W. (kg)	1.71	2.02			2.47		2.98	2.02		2.47
i-Module (W x H x D)	24 x 192 x 230	50 x 192 x 230			90 x 192 x 230			50 x 192 x 230		90 x 192 x 230
MIC-7000 + i-Module (W x H x D)	97 x 192 x 230	123 x 192 x 230			163 x 192 x 230			123 x 192 x 230		163 x 192 x 230
MIC-7700 + i-Module (W x H x D)	101 x 192 x 230	127 x 192 x 230			167 x 192 x 230			-		-
System Fan (Optional)***	-	4cm 98R17520000E			8cm 98R1751300E			4cm 98R17520000E		8cm 98R1751300E
12V_{DC} Conn	1									
PCI/PCIe Card Max. Length (with fan)	181mm									
PCI/PCIe Card Max. Length (without fan)	207mm									

* Need to order 98R1752010E
** MIC-7500 and MIC-7700H: 1x SATA Conn.; MIC-7700Q: 3x SATA Conn.; MIC-7900: 4x SATA Conn.
*** Suggest to add optional system fan if power consumption of add-on card is more than 45W for better thermal management.

Dimension Guide

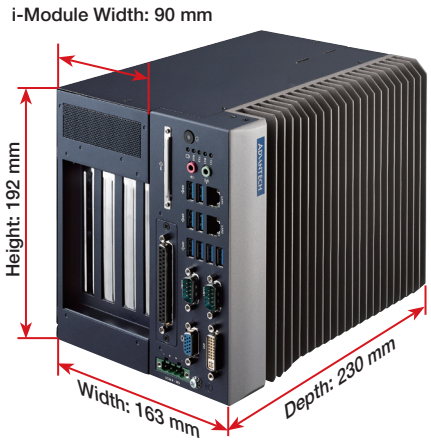

Example: MIC-7500 + MIC-75M40

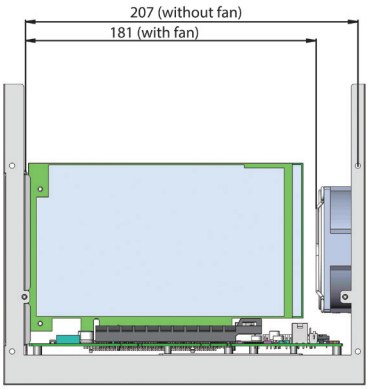

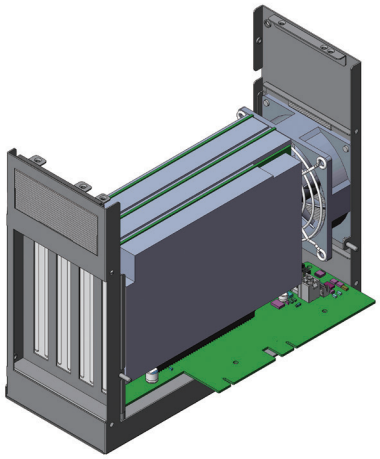

PCI/PCIe Card Max. Length Support

HDD / SSD Support Table

Every model of the MIC-7000 series can be installed with one HDD or SSD. With the i-Module, the numbers of supported HDD/SSD bay are as below:

Model	In i-Module	In MIC-7000	Max. No	Note
MIC-75M10	0	1	1	
MIC-75M20 MIC-75M20-01 MIC-75M11 MIC-73M20 MIC-73M11	1*	1	2	* Need to order 98R1752010E
MIC-75M40 MIC-75M13 MIC-73M13	2	1	3	With MIC-7900 or MIC-7700Q, , it can support to 3 x HDD/SSD
MIC-75S20	2x Hot Swap + 2x Internal	1	5	With MIC-7900, it can support up to 5 x HDD/SSD With MIC-7700Q, it can support up to 4 x HDD/SSD

Note: i-Module BUS has only one channel SATA signal between i-Module and MIC-7000 system.

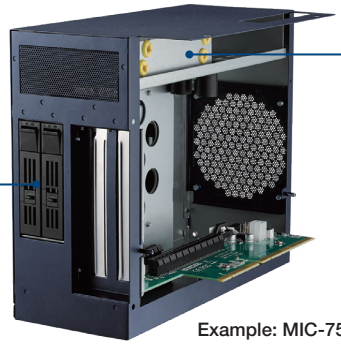

Example: MIC-75S20

2nd HDD bracket for 2-slot i-Module

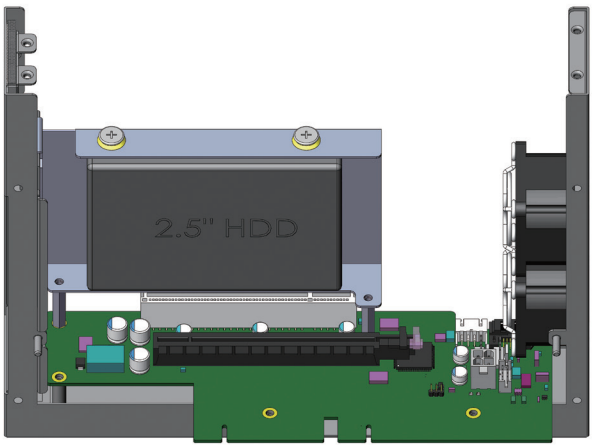

Ordering information: 98R1752010E

Supportable i-Module: MIC-75M20, MIC-75M11, MIC-73M20, and MIC-73M11

Limitation: Slot 2 will be occupied

Ordering Information

Part Number	Description
MIC-75M13-00A1E	4-slot expansion i-Module with 1 PCIe x16, 3 PCI
MIC-75M40-00A1E	4-slot expansion i-Module with 1 PCIe x8, 3 PCIe x4
MIC-75M11-00A1E	2-slot expansion i-Module with 1 PCIe x16, 1 PCI
MIC-75M20-00B1	2-slot expansion i-Module with 1 PCIe x16, 1 PCIe x4
MIC-75M20-01A1E	2-slot expansion i-Module with 2 PCIe x 8
MIC-75M10-00A1	1-slot expansion i-Module with 1 PCIex16
MIC-75S20-00A1E	2-slot expansion i-Module with 1 PCIe x16, 1 PCIe x4, 2 2.5" HDD bay
MIC-73M13-00A1E	4-slot expansion i-Module with 1 PCIe x1, 3 PCI
MIC-73M11-00A1E	2-slot expansion i-Module with 1 PCIe x1, 1 PCI
MIC-73M20-00A1E	2-slot expansion i-Module with 2 PCIe x1

Optional Accessories

Part Number	Description
98R1751300E	8-cm fan for 4-slot i-Modules
98R1752000E	2 x 4-cm fan for 2-slot i-Modules
98R1752010E	Secondary HDD bracket (for 2-slot i-Modules)